CENTA Power Transmission is now part of Rexnord. As a global leader in premium couplings, Rexnord provides the same high quality customer solutions and service you've come to expect from CENTA since 1970.

WWW.CENTA.INFO/CONTACT

WWW.REXNORD.COM

CENTA
HEAD OFFICE

Bergische Strasse 7
42781 Haan
Germany

+49-2129-912-0 Phone
+49-2129-2790 Fax

info@centa.de
www.centa.info

REXNORD POWER TRANSMISSION
HEAD OFFICE

4701 W Greenfield Ave
Milwaukee, WI 53214
USA

+1-414-643-3000 Phone

CENTAMAX-SERVICE LIFE

RUBBER ELEMENT INSPECTION

EBU-CM-02-21

PURE POWER

CENTA redefines POWER.
POWER, to us, is more than merely strength.

POWER, to us, is the passion to find the best solution. To continuously improve successful concepts. To set new standards in performance, flexibility and service.

Each product bearing the name CENTA puts POWER into practice in a unique way. Ensuring pure power. Removing troublesome influences. Enabling optimum results.

CENTA Power Transmission.

RELIABLE PERFORMANCE

We work every day to be the leading global provider of high value, mission-critical solutions that help customers safely, reliably, and productively keep their goods and assets moving.

Customer satisfaction is our priority. We are the most reliable partner in the industry, delivering lowest total cost of ownership, providing valuable expertise and making it easier to do business with the right products in the right place at the right time.

Rexnord Power Transmission.

INSPECTION CRITERIA

In addition to the best materials, CENTA offers one thing above all: experience. Our designs are subject to extensive torsional vibration analysis, multi-mass and finite element analysis. Selected materials combined with regular controls assure the high quality of our products. Size, geometry and material characteristics are relevant for the transmission of torque. Due to different operating conditions and the resulting stress, signs of use in variations will inevitably show on the elements during operation. We recommend regular inspection of the rubber elements as described:

Surface assessment

The rubber surfaces harden and become porous due to external factors (e.g. heat or ozone). This may result in fine diamond shaped cracks and a change of Shore-hardness. These signs of wear do not represent any impairment of the transmission capacity. Nevertheless we recommend visual inspections to be done:

- after 1000 operating hours
- after 4000 operating hours
- thereafter every 6000 operating hours or annually (whichever is shorter time span).

Cracking

Pronounced signs of wear, such as deep cracks, impair torque transmission by reduction of the cross section.

Diamond-shaped cracks and cross cracks on the surface of the element are no problem, yet they have to be checked in intervals. Direct exposure to ozone or heat should be avoided by all means.

Cause of cracks and debonding

Contact us immediatly providing photos and documentation of cracks, damage or debonding, if your maintenance personnel cannot determine the reason for cracking. An immediate replacement of the elements could be necessary if the values indicated in the tables are exceeded.

Theoretical life time of our products

The theoretical life time of natural rubber elements used in our products is 10 years under normal operation conditions. We highly recommend to check the elements according to the following time table:

Coupling type	NR	
	hrs	years
CM-HTC	20.000	10
CM-S	20.000	10

For CENTAFLEX-A, CENTAFLEX-D and CENTAFLEX-R We recommend an exchange of the complete couplings upon engine overhaul

CENTAMAX-RUBBER ELEMENTS SERIES S

PERMISSIBLE CRACK DEPTH AND TOOTHING ABRASION

Size	Toothing Abrasion	Crack length	
	P_{max} [mm]	$R0_{max}$ [mm]	$R1_{max}$ [mm]
800	4	7	10
1200	4	6	9
1600	5	9	14
1800	3	5	8
2400	5	8	12
2800	5	4	6
3500	5	7	11
4000	5	4	6
5000	5	7	11
7000	5	8	12
8000	6	6	9
9000	5	6	9
10000	6	6	9
12000	7	11	17
18000	7	7	11

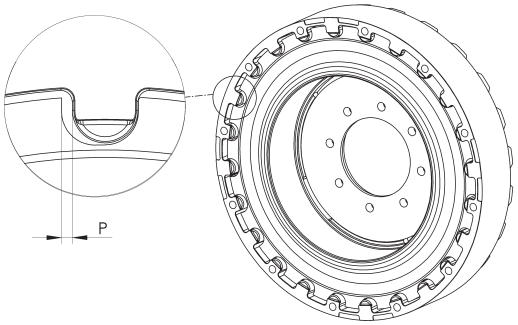

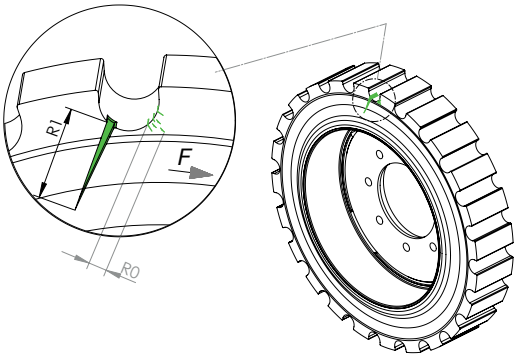

Table of max. permissible crack length and toothing abrasion:
F = circection of Load
P = airgap between the rubber element and the outer part
R0 = length of multiple small cracks on load side
R1 = crack length on non-load side

CENTAMAX-RUBBER ELEMENTS SERIES S

CRACKS BETWEEN TOOTH ROOT AND INNER PART

Size	Crack depth		Crack length
	$R2_{max}+R3_{max}$ [mm]	$R4_{max}+R5_{max}$ [mm]	$R6_{max}$ [mm]
800	7	3	66
1200	7	4	56
1600	8	4	86
1800	8	6	45
2400	8	5	73
2800	6	5	39
3500	8	6	70
4000	7	6	37
5000	10	6	68
7000	9	6	75
8000	9	8	65
9000	8	8	52
10000	9	8	52
12000	14	12	98
18000	14	12	60

Table of max. permissible crack length and toothing abrasion:

F	= Direction of Load
R2+R3	= Sum of crack depth of circumferential cracks near the inner part
R4+R5	= Sum of crack depth between tooth depth and inner part
R6	= crack length near the inner part

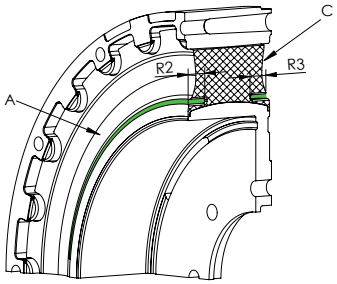

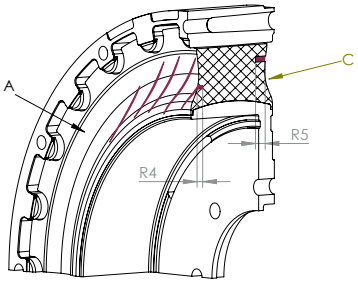

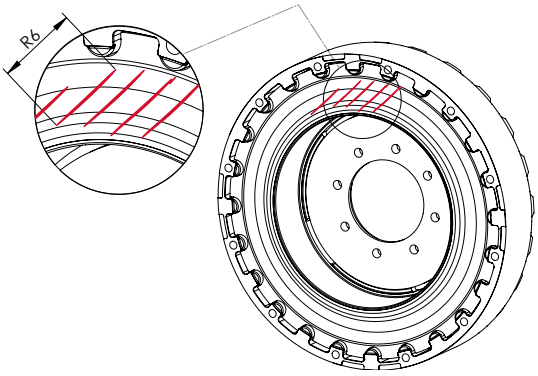

CENTAMAX-SERIES HTC

PERMISSIBLE CRACK DEPTH

Size	Toothing Abrasion	Crack depth	
	P [mm]	**R0 [mm]**	**R1 [mm]**
5600	4	4	6
10000	6	6	9
18000	7	7	11
30000	8	6	9

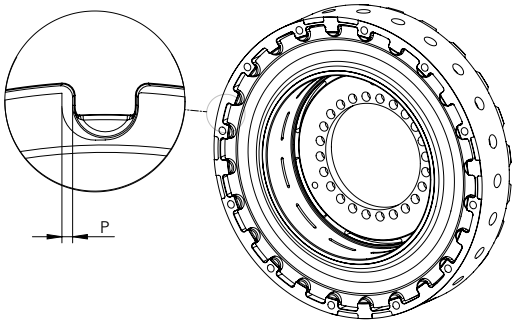

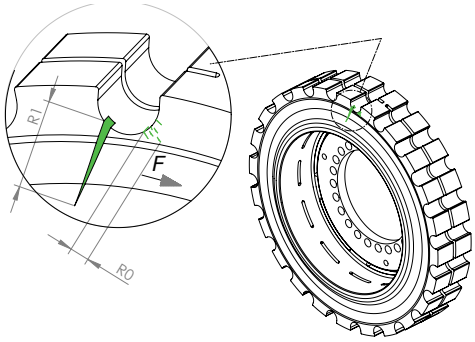

Table of max. permissible crack length and toothing abrasion:
F = cirection of Load
P = airgap between the rubber element and the outer part
R0 = length of multiple small cracks on load side
R1 = crack length on non-load side

PERMISSIBLE CRACK DEPTH

CENTAMAX-SERIES HTC

Cracks between tooth depth and inner part

Size	Crack depth		
	R2+R3 [mm]	R4+R5 [mm]	R6 [mm]
5600	10	8	37
10000	8	7	54
18000	12	10	60
30000	15	15	50

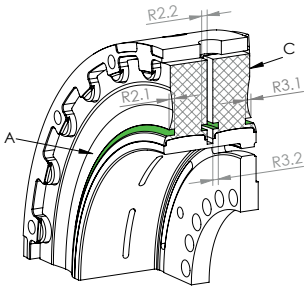

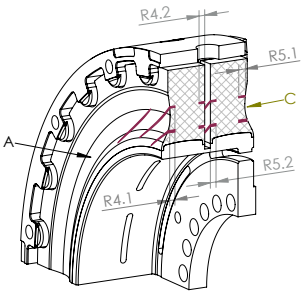

Table of max. permissible crack length and toothing abrasion:	
F	= Direction of Load
R2+R3	= Sum of crack depth of circumferential cracks near the inner part
R4+R5	= Sum of crack depth between tooth depth and inner part
R6	= crack length near the inner part

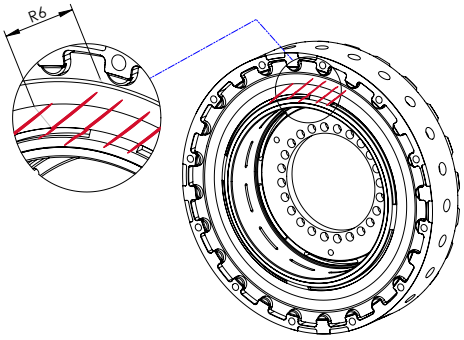

INSPECTION DATA SHEET

Shipping company

Contact

Ship name IMO

Engine Type P: n:

Gearbox Type

Coupling type

Operating hours

Classification

Last alignment check

Direction of rotation ☐ CW ☐ CCW

Shorehardness [Shore A]

Permanent set [S] measured

Oil

Cracks measured

R0 mm

R1 mm

R3, R4 mm

R4, R5 mm

R6 mm

Coupling Status ☐ fit for operation

☐ maintenance required

☐ element exchange required

☐ complete coupling exchange required

Remarks

CENTAMAX - service life - rubber element inspection
© 2021 by CENTA Antriebe Kirschey GmbH
Rev. EBU-CM-02-21

1. This catalog supersedes previous editions.

   This catalog shows the extent of our coupling range at the time of printing. This program is still being extended with further sizes and series. Any changes due to technological progress are reserved.

   We reserve the right to amend any dimensions or detail specified or illustrated in this publication without notice and without incurring any obligation to provide such modification to such couplings previously delivered. Please ask for an application drawing and current data before making a detailed coupling selection.

2. We would like to draw your attention to the need of preventing accidents or injury. No safety guards are included in our supply.

3. TRADEMARKS

   CENTA, the CENTA logo, Centacone, CENTADISC, CENTAFIT, Centaflex, CENTALINK, Centalock, Centaloc, Centamax, Centastart, CENTAX and HYFLEX are registered trademarks of CENTA Antriebe Kirschey GmbH in Germany and other countries.

   Other product and company names mentioned herein may be trademarks of their respective companies.

4. Torsional responsibility

   The responsibility for ensuring the torsional vibration compatibility of the complete drive train, rests with the final assembler. As a component supplier CENTA is not responsible for such calculations, and cannot accept any liability for gear noise/-damage or coupling damage caused by torsional vibrations.

   CENTA recommends that a torsional vibration analysis (TVA) is carried out on the complete drive train prior to start up of the machinery. In general torsional vibration analysis can be undertaken by engine manufacturers, consultants or classicfication societies. CENTA can assist with such calculations using broad experience in coupling applications and torsional vibration analysis.

5. Copyright to this technical dokument is held by CENTA Antriebe Kirschey GmbH.

6. The dimensions on the flywheel side of the couplings are based on the specifications given by the purchaser. The responsibility for ensuring dimensional compatibility rests with the assembler of the drive train. CENTA cannot accept liability for interference between the coupling and the flywheel or gearbox or for damage caused by such interference.

7. All technical data in this catalog are according to the metric SI system. All dimensions are in mm. All hub dimensions (N, N_1 and N_2) may vary, depending on the required finished bore. All dimensions for masses (m), inertias (J) and centres of gravity (S) refer to the maximum bore diameter.